Name : _____ Score : _____

Teacher : _____ Date : _____

3 Minute Drill

5 x 12	5 x 2	4 x 11	5 x 1	5 x 7	5 x 7
5 x 4	4 x 12	6 x 5	5 x 3	4 x 9	5 x 8
5 x 2	4 x 10	6 x 2	4 x 2	4 x 11	5 x 0
5 x 9	5 x 11	6 x 3	4 x 4	6 x 7	4 x 0
5 x 10	4 x 6	4 x 3	5 x 0	4 x 10	4 x 7
4 x 12	5 x 3	5 x 5	4 x 2	5 x 6	4 x 9
4 x 5	4 x 3	5 x 6	6 x 10	4 x 6	6 x 9
6 x 4	4 x 1	5 x 5	4 x 4	5 x 1	6 x 1
4 x 7	6 x 8	4 x 1	6 x 12	4 x 8	6 x 11
4 x 8	4 x 0	6 x 0	6 x 6	5 x 4	4 x 5

Math-Aids.Com

Division Practice

2)8	1)4	2)2	1)6	2)16	1)5	2)4
1)7	2)10	1)2	2)12	1)8	2)6	1)1
2)12	1)2	2)18	1)7	2)10	1)4	2)4
1)8	2)8	1)3	2)16	1)1	2)14	1)9
2)18	1)5	2)6	1)6	2)8	1)7	2)12

3 ÷ 1 = ___	4 ÷ 2 = ___	8 ÷ 2 = ___	9 ÷ 1 = ___
2 ÷ 1 = ___	10 ÷ 2 = ___	4 ÷ 1 = ___	14 ÷ 2 = ___
16 ÷ 2 = ___	6 ÷ 1 = ___	12 ÷ 2 = ___	3 ÷ 1 = ___
6 ÷ 1 = ___	8 ÷ 1 = ___	2 ÷ 1 = ___	5 ÷ 1 = ___
2 ÷ 2 = ___	5 ÷ 1 = ___	3 ÷ 1 = ___	10 ÷ 2 = ___
14 ÷ 2 = ___	18 ÷ 2 = ___	1 ÷ 1 = ___	16 ÷ 2 = ___

© Edupress EP139

Name: _____ Date: _____

Lesson 6.8 Real-World Problems: Fractions

Solve. Show your work.

1. Arthur had \$90. He spent \$40 and gave \$20 to his brother. What fraction of Arthur's money is left?

2. A baker has 20 pounds of sugar. He uses $\frac{3}{4}$ of the sugar to bake muffins. How much sugar does he have left?

© Marshall Cavendish International (Singapore) Private Limited.

Name: _____ Date: _____

3. Mya buys 6 goldfish and 4 angelfish.

a. What fraction of the fish are goldfish?

b. Mya buys 2 more goldfish. What fraction of the fish are angelfish?

4. Cheryl spends $\frac{3}{10}$ of her savings on a book, and $\frac{2}{5}$ of it on a pen. What fraction of her savings does Cheryl spend?

© Marshall Cavendish International (Singapore) Private Limited.

Name: _____ **Date:** _____

5. Of the vehicles on the road, $\frac{1}{2}$ are cars and $\frac{1}{8}$ are motorcycles. What fraction of the vehicles are not cars or motorcycles?

6. Allie's plant has a height of 6 meters. Rajon's plant grows $\frac{3}{10}$ meter higher. How high does Rajon's plant grow?

© Marshall Cavendish International (Singapore) Private Limited.

Name: _____ Date: _____

7. There are 10 packets of ham. Of the packets, $\frac{2}{5}$ are turkey ham. Each packet of turkey ham weighs $\frac{1}{3}$ pound. What is the total weight of the turkey ham?

8. Carla spends $\frac{6}{4}$ hours exercising every day for 12 days. She spends $\frac{1}{2}$ of her exercise time every day lifting weights. How much time does Carla spend lifting weights during the 12 days?

© Marshall Cavendish International (Singapore) Private Limited.

Guided Practice 8.1 MLA

Add.

3 $\begin{array}{r} 0.4 \\ +\ 0.2 \\ \hline \end{array}$

4 $\begin{array}{r} 0.5 \\ +\ 0.6 \\ \hline \end{array}$

5 $\begin{array}{r} 3.5 \\ +\ 2.9 \\ \hline \end{array}$

Copy and write in vertical form. Then add.

6 2.3 + 3.5

7 5.9 + 8

8 7.6 + 4.8

Let's Practice

Add.

1 $\begin{array}{r} 0.3 \\ +\ 0.4 \\ \hline \end{array}$

2 $\begin{array}{r} 4.5 \\ +\ 3.2 \\ \hline \end{array}$

Complete.

3 18 tenths = one and tenths

4 6 tenths + 8 tenths = tenths

= one and tenths

5 $\begin{array}{r} 2.4 \\ +\ 4.6 \\ \hline \end{array}$

6 $\begin{array}{r} 5.8 \\ +\ 1.4 \\ \hline \end{array}$

Copy and write in vertical form. Then add.

7 2.6 + 0.7

8 1.8 + 2.8

ON YOUR OWN

Go to Workbook B: Practice 1, pages 21–22

Copy and write in vertical form. Then add.

14. 4.5 + 6.48
15. \$10.25 + \$6.35
16. \$1.99 + \$1.05

Let's Practice

Add.

1. $\begin{array}{r} 0.06 \\ +\ 0.03 \\ \hline \end{array}$

2. $\begin{array}{r} 5.63 \\ +\ 2.25 \\ \hline \end{array}$

Regroup.

3. 17 hundredths = tenth hundredths

4. 7 hundredths + 6 hundredths = hundredths
   = tenth hundredths

Add.

5. $\begin{array}{r} 0.38 \\ +\ 0.05 \\ \hline \end{array}$

6. $\begin{array}{r} 4.4 \\ +\ 1.99 \\ \hline \end{array}$

7. $\begin{array}{r} 2.49 \\ +\ 1.86 \\ \hline \end{array}$

Copy and write in vertical form. Then add.

8. 8.4 + 3.67

9. \$13.58 + \$0.69

ON YOUR OWN

Go to Workbook B: Practice 2, pages 23–26

Name: _____ Date: _____

Lesson 11.2 Properties of Squares and Rectangles

All the figures are rectangles.
Find the measure of the marked angles.

1. Find the measure of $\angle a$.

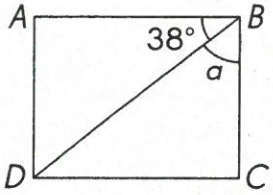

2. Find the measure of $\angle b$.

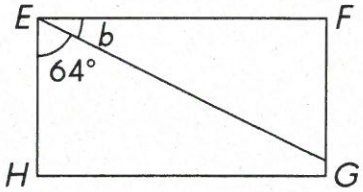

3. Find the measure of $\angle c$.

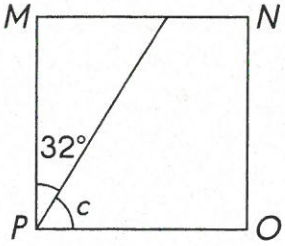

4. Find the measure of $\angle d$.

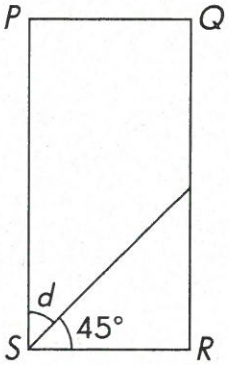

© Marshall Cavendish International (Singapore) Private Limited.

Name: _____ Date: _____

Find the lengths of the unknown sides.

5. The figure is made up of three rectangles. $BC = DE$. Find the length of $\overline{HG}$ and $\overline{DE}$.

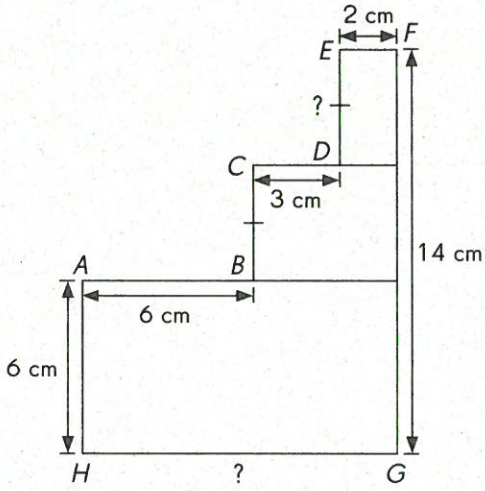

6. The figure is made up of two rectangles. Find the length of $\overline{ST}$ and $\overline{RS}$.

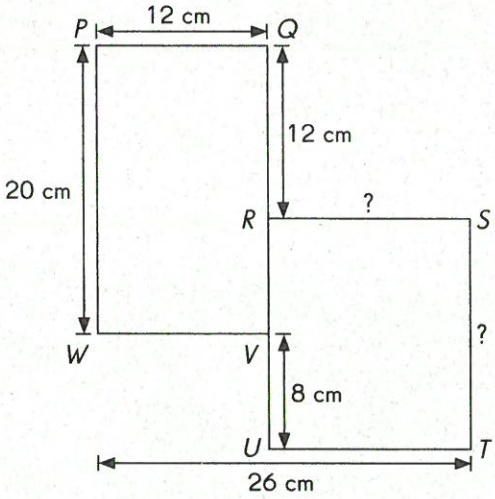

7. The figure is made up of three rectangles. Find the length of $\overline{AJ}$ and $\overline{HG}$.

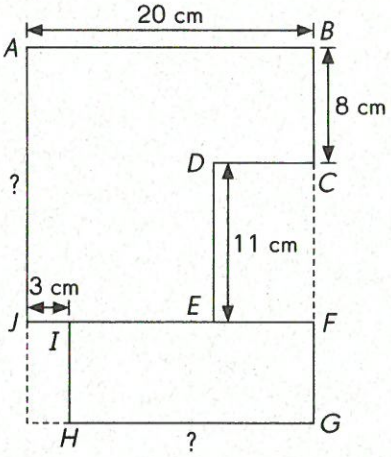

© Marshall Cavendish International (Singapore) Private Limited.

Name: _____ Date: _____

Mid-Year Test

50

Suggested Time: 45 min

Multiple Choice

(10 × 2 points = 20 points)

Fill in the circle next to the correct answer.

1. Estimate 745 + 359 by rounding to the nearest hundred.

Ⓐ 1,000 Ⓑ 1,100 Ⓒ 1,104 Ⓓ 1,200

2. Which pair of numbers are composite numbers?

Ⓐ 4 and 9 Ⓑ 13 and 23 Ⓒ 25 and 31 Ⓓ 53 and 81

3. What is the sum of all the common factors of 12 and 20?

Ⓐ 3 Ⓑ 7 Ⓒ 28 Ⓓ 70

4. Divide 9,519 by 9.

Ⓐ 157 R6 Ⓑ 1,057 Ⓒ 1,057 R6 Ⓓ 1,507 R6

5. After giving out 17 cards to each of his 42 students, Mr. Tan had 23 cards left. How many cards did he have at first?

Ⓐ 737 Ⓑ 714 Ⓒ 691 Ⓓ 82

© Marshall Cavendish International (Singapore) Private Limited.

Name: _____ Date: _____

6. The line plot shows the number of $5 bills each student has.

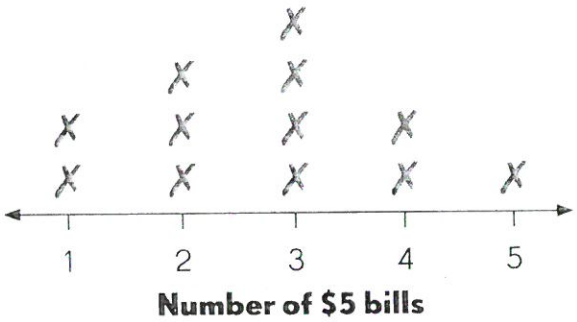

How much money does the group of students have altogether?

(A) $22 (B) $44 (C) $165 (D) $88

7. What is the probability of drawing a number greater than 5 from this set of cards?

(A) $\frac{2}{5}$ (B) $\frac{1}{3}$ (C) $\frac{1}{2}$ (D) $\frac{1}{6}$

8. What is the missing mixed number in the number line?
Express your answer as an improper fraction in simplest form.

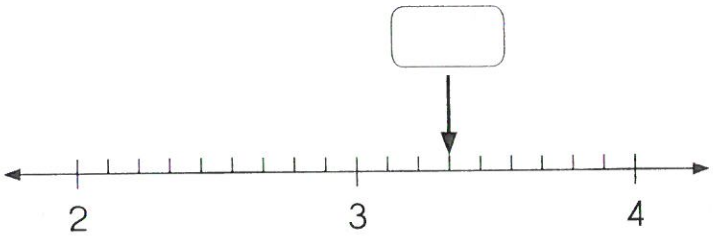

(A) $3\frac{3}{9}$ (B) $2\frac{8}{9}$ (C) $\frac{30}{9}$ (D) $\frac{10}{3}$

© Marshall Cavendish International (Singapore) Private Limited.

Name: _____ Date: _____

9. The string is _____ inches long.

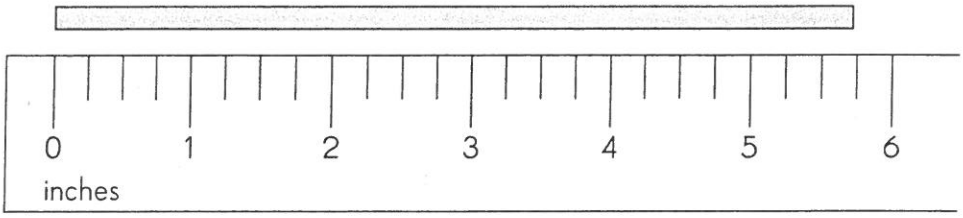

(A) 5 (B) $5\frac{1}{2}$ (C) $5\frac{3}{4}$ (D) 6

10. What is the mode of the data?

61 in. 36 in. 45 in. 21 in. 60 in. 36 in.

(A) 61 in. (B) 45 in. (C) 40 in. (D) 36 in.

Short Answer

(10 × 2 points = 20 points)

Complete.

11. How many fourths are in $2\frac{1}{4}$?

_____

12. Write thirty-two thousand, two hundred sixteen in expanded form.

_____

13. The digit 9 in 95,032 is in the _____ place.

14. Estimate the quotient of 625 ÷ 9.

_____

© Marshall Cavendish International (Singapore) Private Limited.

Name: _____ Date: _____

15. The table shows the number of students in three classes. Complete the table.

Classes	Number of Students		Total Number
	Boys	Girls	
A	21	12	
B	16		30
C		18	36
Total			

Use the table to answer exercise 16.

16. **a.** How many more boys than girls are there? _____

b. What fraction of the students are girls? _____

17. There are 8 balls in a bag. There are 2 red balls and 4 blue balls. The remaining balls are green. Write the probability of drawing a green ball from the bag as a fraction.

_____

Look at the spinner. Write *more likely, less likely, equally likely, certain,* or *impossible*. Explain your answer.

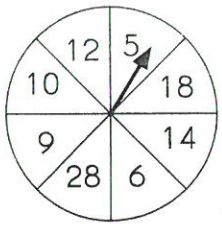

18. It is _____ that the spinner will land on a number which is divisible by 3 because _____.

© Marshall Cavendish International (Singapore) Pte Ltd

Name: _____ Date: _____

Solve. Show your work.

19. Jamie has 2 pounds of butter. She used $\frac{3}{8}$ pound of butter to make batter for pancakes. How much butter is left?

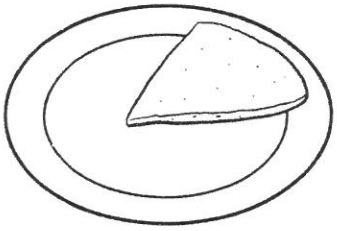

20. Mrs. Alexandra made 4,564 milliliters of orange juice. She mixed water and orange syrup to make the orange juice. The amount of water was 6 times the amount of syrup. How much more water than syrup was used?

© Marshall Cavendish International (Singapore) Private Limited.

Name: _____ Date: _____

Extended Response

(5 × 2 points = 10 points)

Solve. Show your work.

The weights of the first three dogs at a veterinary clinic one morning are 21 pounds, 28 pounds, and 32 pounds.

21. Find the average weight of the 3 dogs.

22. When a fourth dog is weighed, the average weight of the 4 dogs becomes 29 pounds. What is the weight of the fourth dog?

23. The table shows the amount of money saved by two boys. Complete the table.

Boys	25¢ coins		50¢ coins		Total
	Number	Amount	Number	Amount	
Brandon	12			$4.50	
Sam		$1.50	7		

Use the table to answer exercise 24.

24. **a.** Who has more money?

b. How much more money does he have?

25. How much money must one boy give to the other so that they both have the same amount of money? Give your answer as the number of 25¢ and 50¢ coins needed.

© Marshall Cavendish International (Singapore) Private Limited.